MIR v6122D

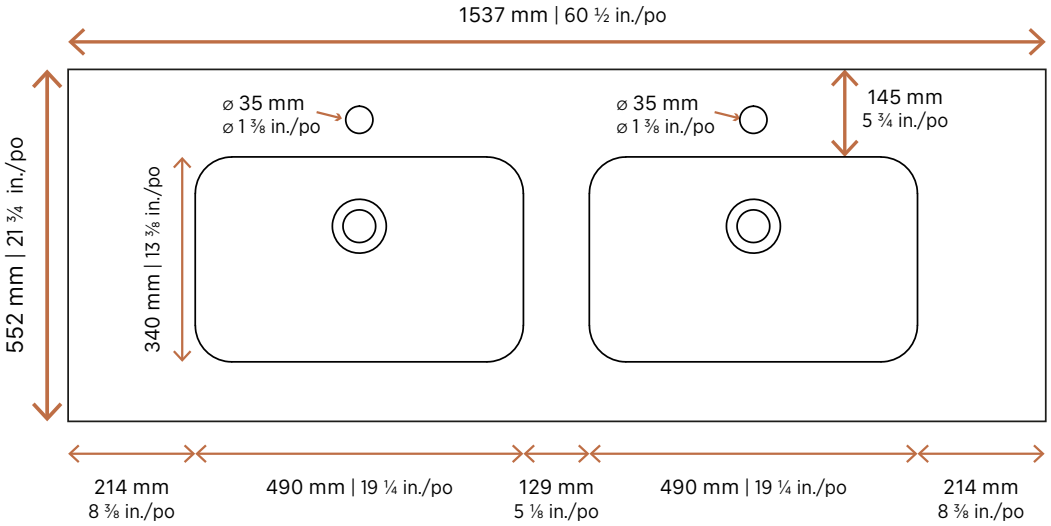

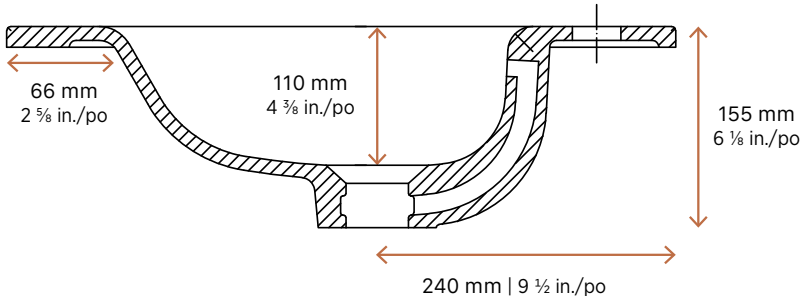

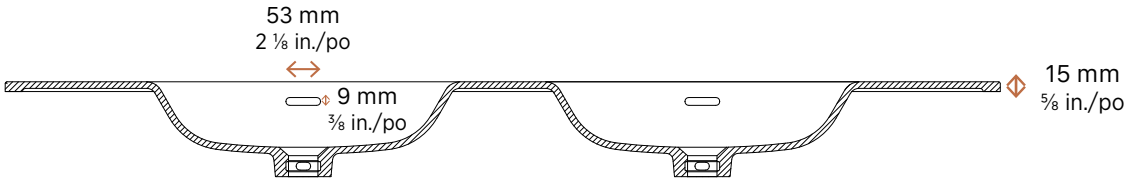

LUXO
ÉLÉMENTS